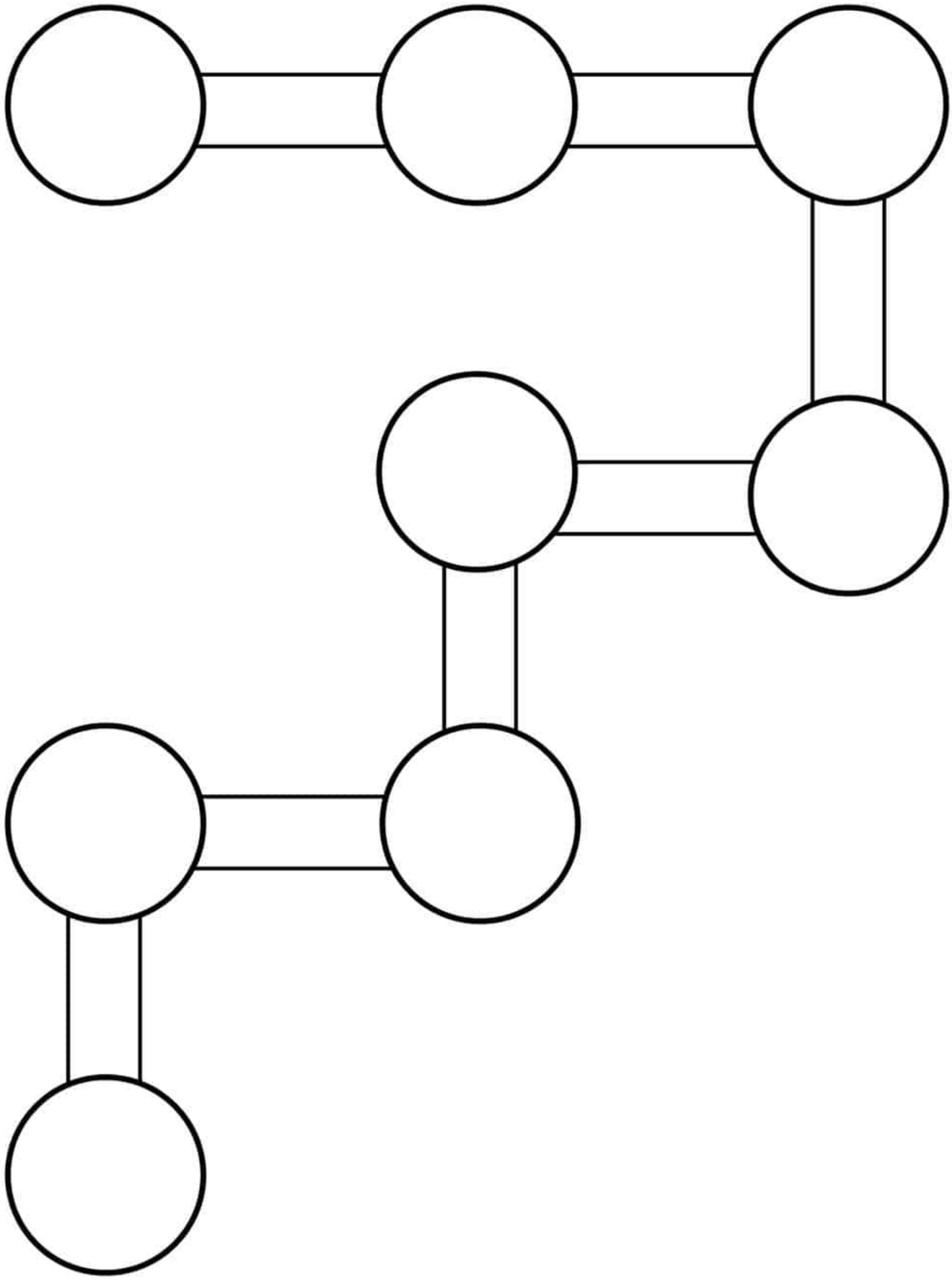

CREATED BY PLANERIUM COPYRIGHT © ALL RIGHTS RESERVED HTTPS://WWW.PLANERIUM.COM